This illustration © www.armyradio.ch, danke!

Autophon™ (AAG)

Radio Set Intercom Amplifier BV83

used as

Speaker Amplifier for Receivers

with Line or Headphone outputs only

BV83 MkII

Preface: The Small Print

When using the information on these pages for your work please note the following terms and conditions. By using any of the information presented you accept these terms. Thank you!

Restoration Projects Philosophy

The purpose of many restoration projects described here is to bring the antique equipment back into working condition close to original specifications while generally preserving their historic electronic and mechanical design. This means that often new components (e.g. capacitors) need to be used - in many cases NOS will not do - which sometimes require small mechanical modifications to the set.

This treatment does not conform to "museum" standards that require everything to be left or restored to original. This is an entirely different approach. It is up to you to decide what you want to do.

Modifications and Homebrew Projects

The projects shown are for information only with the main goal to motivate fellow amateurs and hobbyists to start on similar projects. Comments for improvements are always welcome. They are always "prototypes" and not a kit. You'll have to find your own parts. No warranty is given nor implied that they actually work in your situation.

And please note that a modified piece of equipment looses its collector value - but brings joy to its successful operator!

Copyright

Some of the circuit diagrams, manual pages or software used and edited are covered by copyrights of their original publishers and intended here for personal use only. No complete manuals can be found, there are already many sources on the web for this purpose.

My personal designs are covered by the GNU licence agreements. Pictures and other documents may not be republished without indicating the source.

Regulations

Many of the described obsolete radios (or computers) no longer fulfill today's requirements for e.g. electrical safety, EMC, used bandwidth, levels of harmonics or spurs or intermodulation. While at times suitable corrective action is included in my descriptions, many times it is not. It is your responsibilty to make sure your equipment conforms to the requirements in your own country.

Safety while Working on the Projects

*It is your own responsibility and all-important to always observe proper safety procedures in your work. Some of these projects - certainly almost all vacuum-tube circuits - involve high voltages, some lethal indeed. Make sure you understand what you are doing or else get some qualified help here. Just look at **this page** to see some tips on this one.*

Always "Switch to Safety" when you work on your equipment! Please pay attention to proper grounding of all metal chassis and enclosures and consider the use of GFCI breakers to your shack/workbench.

This information and much more can be found on my website hb9aik.ch

1. Project Idea

In my display of working receivers of various vintage some provide line or headset outputs only and have no speaker. Some have low, others high impedance outputs. For demonstration purposes it is however necessary to be able to play the received audio signals on a speaker to the visitors.

Basically this is an easy problem using any active speaker set-up such as the cheap units offered for PCs or laptops – perhaps with the exception of the high impedance input – but being part of a historic display something antique had to be used, something using tubes.

2. Choice of amplifier

In radio systems in armoured vehicles there usually is an intercom amplifier providing e.g. the radio signals to the various crew members. Mostly for headsets again but usually 600 ohms and more than 1W of audio power. Using a military speaker with a built-in 600:8 ohm audio transformer such as the US made LS-166/U, the volume is sufficient to fulfill the envisaged purpose.

Looking at units on my shelf it was decided to use a Swiss designed[1] amplifier which was part of the SE-407[2] family of mobile VHF voice radio sets and deployed in armoured and command vehicles from 1957 onwards. By 1986 the radios were all decommissioned. For the envisaged purpose this was considered „antique enough“.

The system used two different such intercom AF amplifiers: the NV83 and the BV83.

A BV83 was selected because it has an internal power supply. It provides two 600Ω inputs with step-up isolation transformers which are summed into one 600Ω output. Volume control is only available on one input. Battery voltage can be set to nominal 12 or 24VDC. It uses 3 tubes (2x EF804s and 1x 6AQ5), selenium rectifiers and a 12/24V mechanical vibrator @ 100Hz. All connections to the unit go through a 18pin Multipol™ connector[3].

A circuit diagram was folded up and placed in each amplifier, a scanned version of this original is shown below:

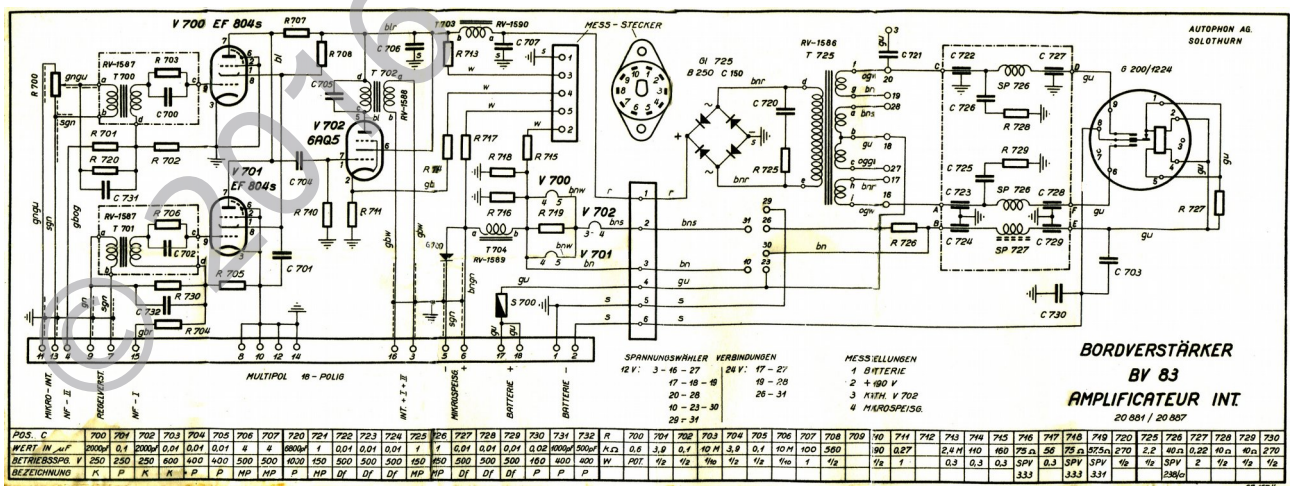

Original BV83 circuit diagram

1 Designed and manufactured by Autophon AG, Solothurn/Switzerland.
2 See details in http://www.armyradio.ch/radio-e/se-407-e.htm
3 This Multipol™ series of connectors was made in large quantities by Autophon as well.

3. Adapting the Amplifier

The intended application requires two inputs: one 600Ω and one high impedance (2-4kΩ). The step-up transformers are not needed as the output level from the radios is quite sufficient. The volume control is 600Ω, so this was left in place, the transformer disconnected but not removed and an R/C input circuit added. A cathode resistor was added to the EF804s and the plate resistor decreased for improved linearity.

The second input was changed in a similar way providing an input resistance of 3kΩ for high impedance headset outputs.

The remaining circuit of the amplifier i.e. the summing function and the 6AQ5 output circuit remained unchanged. The capacitors – with the exception of the large MP units – were changed. Interesting to note, that in the life of the amplifier these capacitors apparently were changed once before as part of an overhaul program.

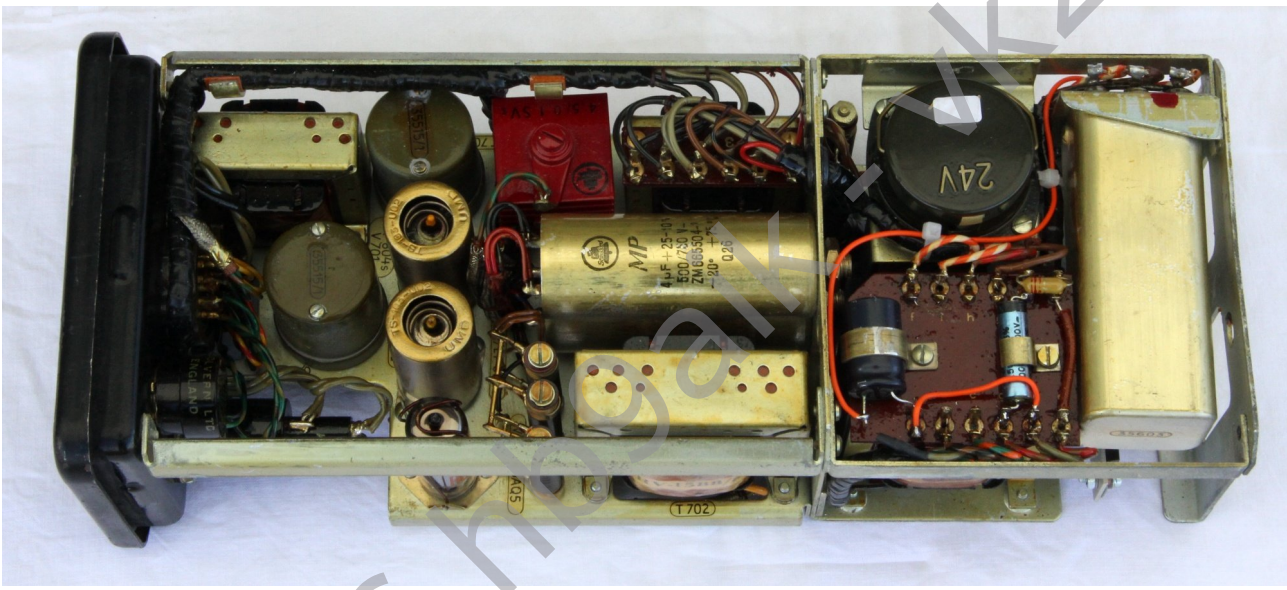

Amplifier BV83 MkII, top view

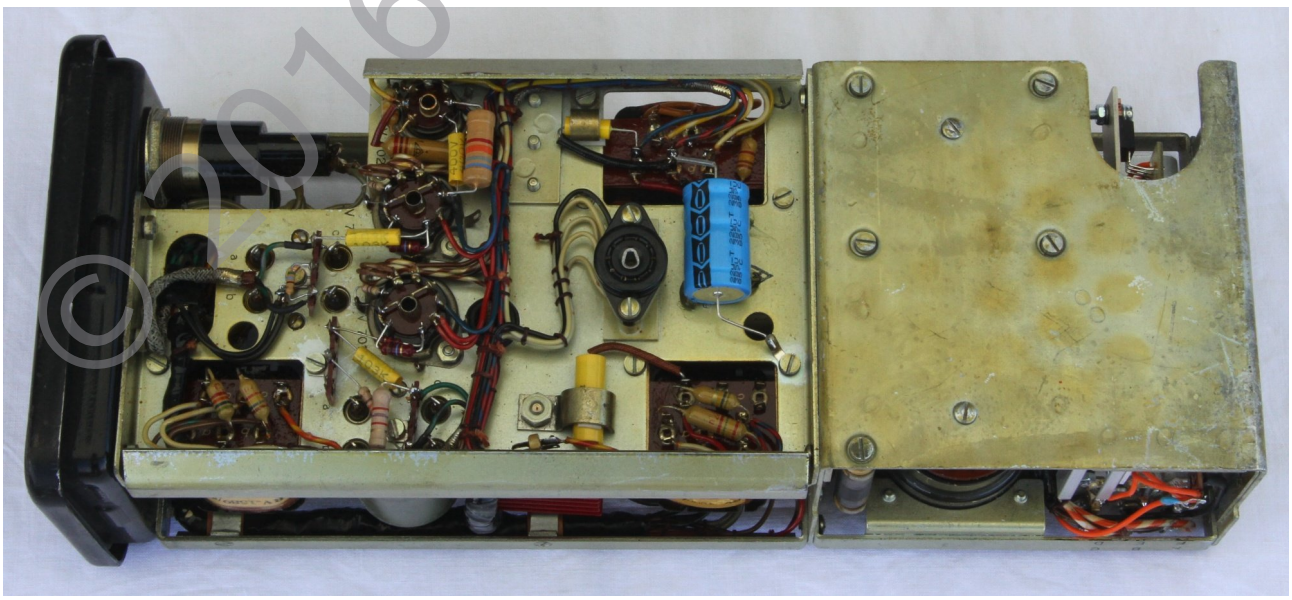

Amplifier BV83 MkII, bottom view

Amplifier BV83 MkII, front view

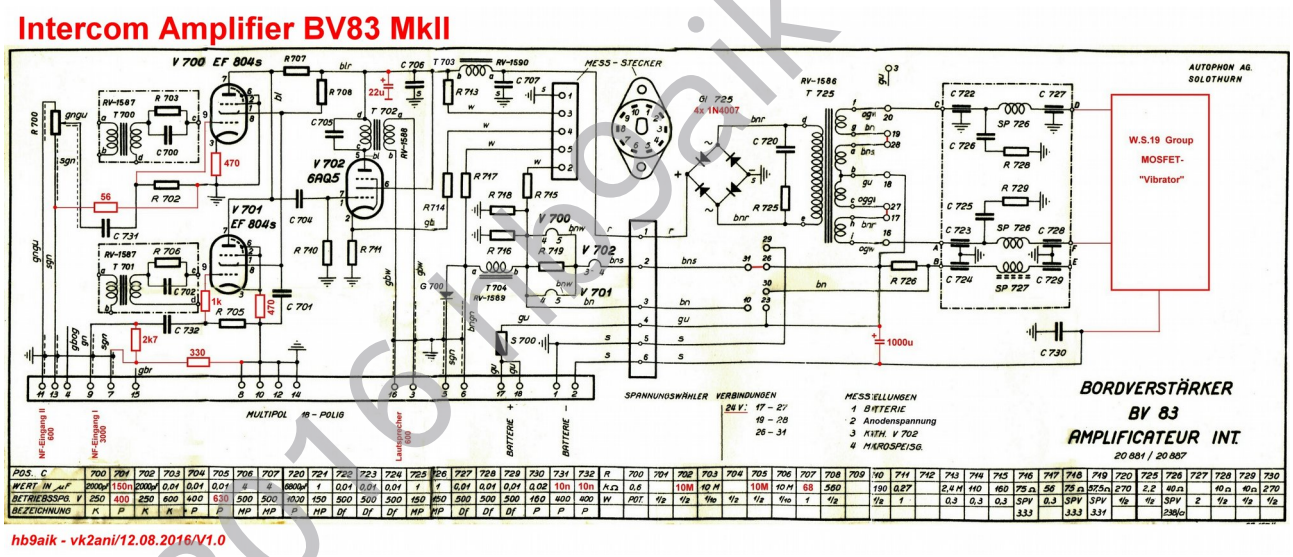

Amplifier BV83 MkII, circuit diagram

4. Adapting the internal Power Supply

In the display area 28VDC is available and it was decided to use this voltage[4]. However the mechanical vibrator had to go (the unit in the amplifier had a date code 1963) and the selenium rectifier too. The latter was a flat unit replaced by a circuit board with 4x 1N4007 diodes. No series resistor is needed as the input is a square wave and no objectionable increase in plate voltage was observed.

4 The voltage selector is set to 24V, but at 24V the heater voltage on the tubes was found to be below 6V so 28V was deemed ok. The plate voltage is now 220V as compared to the 190V usual in these radios, but the 6AQ5 is still well within its ratings.

The replacement of the vibrator was done using a PC board by the Wireless-Set-No19 Group[5] which provides basically an astable multivibrator driving two power MOSFETs. As the KACO vibrator has a special 9pin base with a rectangular case and there was no unit to dismantle available at the time it was decided to remove the socket in the amplifier and build a small aluminum bracket. Would have been more elegant to build it inside an empty vibrator case though. The WS19 circuit was slightly modified for 28V (12 zener diode) and different MOSFETs used which happened to be in stock. 117Hz was measured on the unit built.

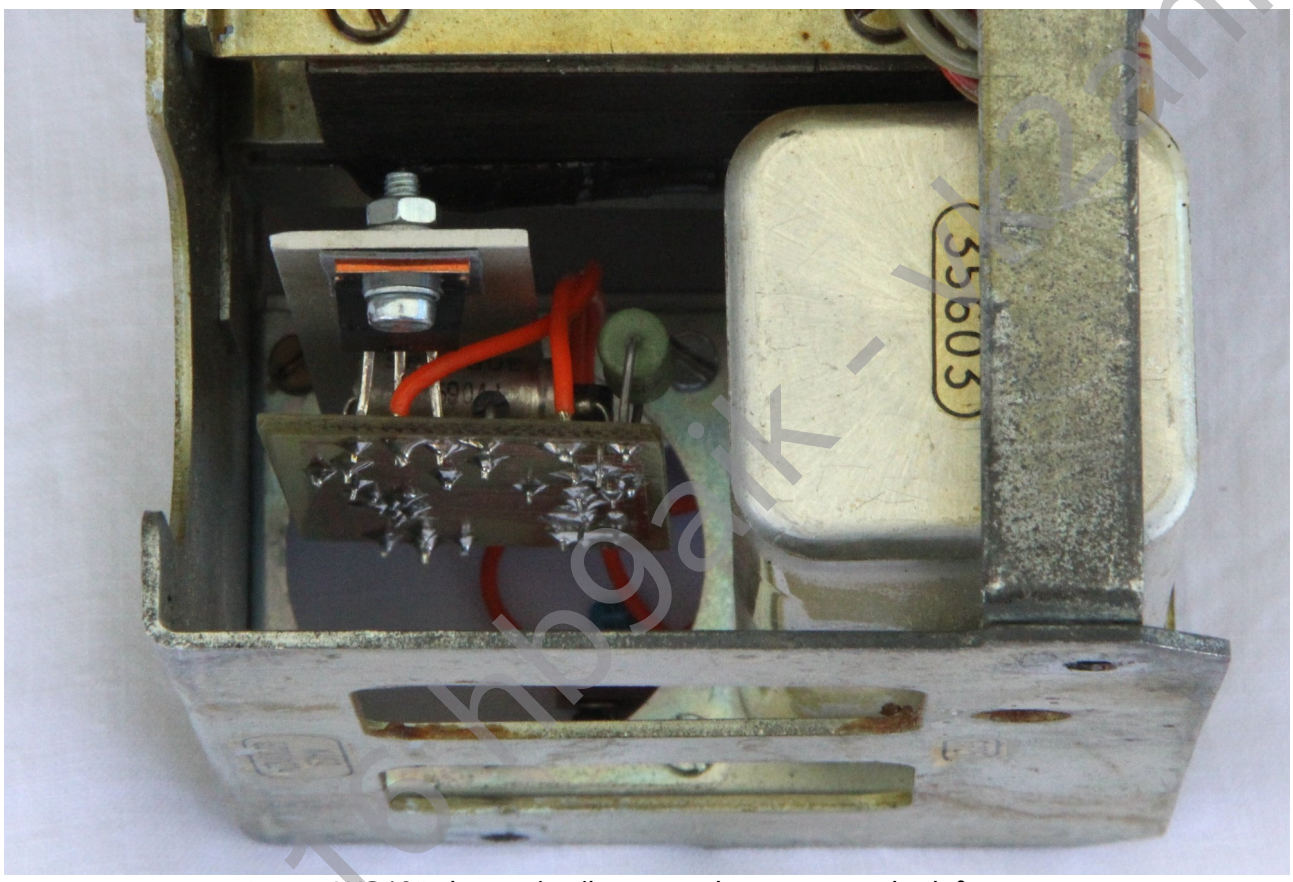

„WS19“ electronic vibrator replacement on the left

5. Amplifier System Test

At this point it was possible to test the amplifier, measure e.g. gain, distortion and output power. The limit into a 560Ω resistor is about 2W with 3% distortion. At levels below that noise and distortion is <2%. Input level on 600Ω for this output is from about -10 to 0dBm.

During the test inside the box – which originally has just a louvred hole in the back – it was found that the amplifier gets quite hot (case up to 50°C @ 25° ambient) not in the least because of the voltage dropping resistors in the heater circuit. It was the decided to add a small 12V fan operated @ about 8V in place of the rear louvre and to cut a 28mm hole on top of the 6AQ5 and the heater resistors. The hole was then protected with a cover part from another fan. Heat management is now satisfactory with very low noise.

5 http://royalsignals.org.uk/vibs/ also available as kits or fully built. The circuit is not „switchable“ between 12 and 24V as in the original. For copyright reasons there is no circuit diagram here, sorry.

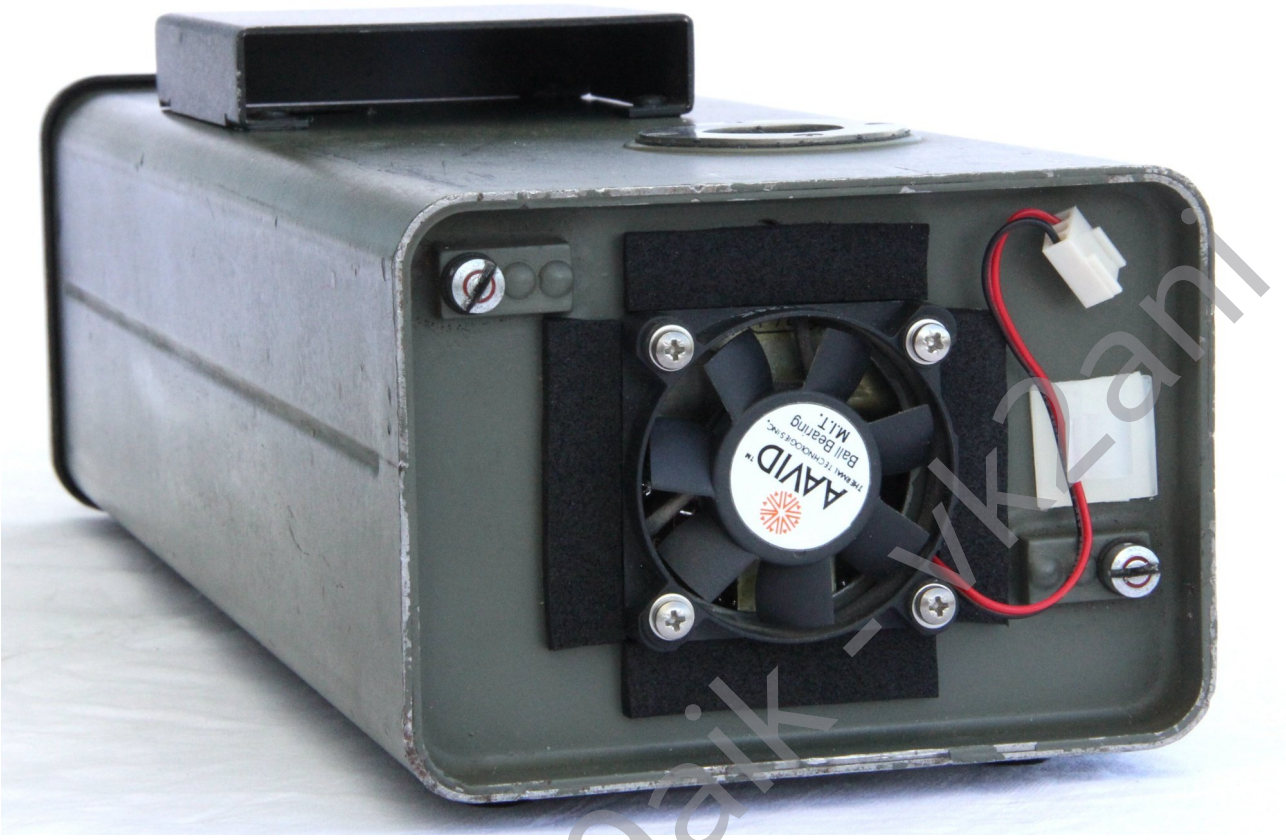

Rear of amplifier with fan installed

6. External 28VDC Power Source

Once started, projects tend to expand and it was decided to build a 28VDC output AC-power supply housed in a matching case. The latter was obtained by using the spare parts box and removing any brackets and rubber bands inside. To avoid drilling the holes in the heavy gauge steel front panel such a panel was removed from a NV83 amplifier wreck.

A salvaged 60W open-frame switching power supply[6] was used and adapted from 24V to provide 28V by changing a resistor. As only about 1A is used to power the amplifier the 60W unit runs only slightly warm but a small chip cooling fan was added to keep the air moving inside the box. Also added is a 7805 regulator providing adjustable power to the two fans.

On input and output symmetrical filters were added[7] and the DC supply kept floating and connected to the case inside the BV83 only. Such measures are necessary and – combined with the fully enclosed metal box – provide the necessary EMC protection. All connections go through another 18pin Multipol™ connector Details may be taken from the pictures below.

6 PHIHONG PSA-60-124, 90-260VAC input.

7 An enclosed NOS filter unit was first used – which resulted in a small explosion due to a defective RIFA capacitor. Should have known better – be warned.

AC power supply, front view

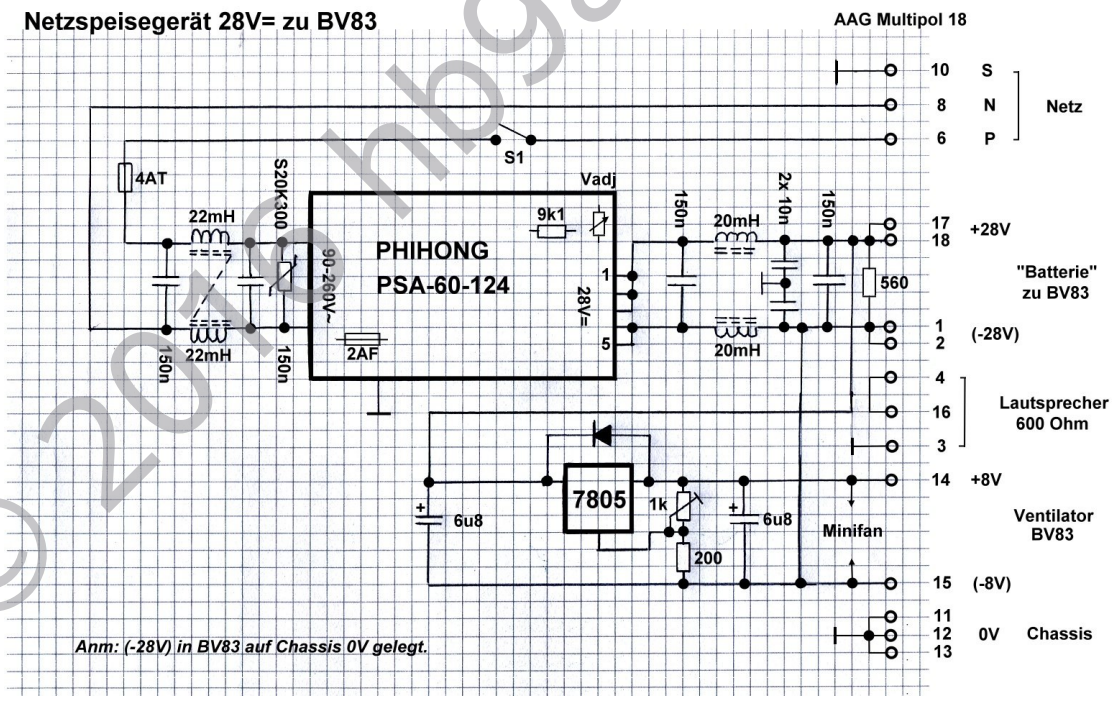

AC power supply, circuit diagram

AC power supply, top view

7. System Cable

As all connections to the units go through the 18pin front panel connectors, a special cable set had to be built. This cable provides the interconnection between the two units, connection to the mains supply, fan power, speaker output (9pin D-Sub) and screened AF input (3pin XLR).

Interconnection cable set

8. System Picture

BV83 MkII System ready to go[8]

8 The front panel and the cables will clear the display shelf which is only 25cm deep – no book required.