Extract

Signal

The Journal of the Vintage and Military Amateur Radio Society

Issue 64: August 2022

Contents

Made in GDR: R5, the portable EKB HF receiver in its Czech variant

Ulrich Fierz HB9AIK/VK2ANI

In the late 1950ies, the GDR army (NVA) and GDR police organisations required two new small, portable and battery operated receivers: one for HF (EKB) and one for VHF (EUB). The task to design these receivers was given to *VEB Funkwerk Dabendorf* **[1]**, at the time best known for its heavy shipboard HF receivers *Dabendorf*, first issued in 1953 and twice upgraded later. This new specification was for a totally different set and required a fresh and innovative approach to meet the ambitious limits for performance, size, weight and battery consumption. The engineering experience gained in professional receiver design however was valuable.

Figure 1. Overall appearance of the R5 receiver.
Key to front panel labels: ANTÉNA: Antenna; PROVOZ: Operation (Mode, K▼ is Calibrate); ROZSAH: Range (Band); SLUCHÁTKA: Headphones; LADĚNÍ: Tuning; VYPNUTO: Off (with the ring underneath meaning push in for off); NAPĚTÍ ZDROJE: Source voltage (on the instrument when button pressed); OSVĚTLENÍ STUPNICE: Dial lighting (when button pressed)

Introduction

The EKB was required to cover 1.5–22 MHz, demodulate A1 (with superior features), A2 and A3, work for 24 hours on a battery and weigh complete ~15 kg on the radioman's back. Looking at a *Zenith Transoceanic Royal 1000* (introduced 1957) **[2]** that appears not too difficult, but it was a different task with the significant lag in technology and limited resources prevailing at the time in the GDR. The design team had to use what was available locally. Based on the documentation **[9 et seq.]** it was introduced in 1962.

In 1962 the receiver was also exported, certainly to Poland (where it was eventually replaced by the Russian P-326) and to Czechoslovakia for the ČSLA as the R5P (portable) and the R5A (mobile/fixed). The latter can, for example, be found as a back-up HF receiver in the ŤRINEC RM31-M-a station installed in a Tatra T805 radio truck **[3]**. Apparently, it remained in service till 1989.

The following description is based on original documents: from the GDR for the EKB (in German) and from Czechoslovakia for the R5P, R5A and ZS-R5 (in Czech).

Active devices

After 1956/58, some locally-made components became available which would support the required miniaturized design: sub-miniature battery pentodes and germanium alloy transistors.

In the *VEB Röhrenwerk Neuhaus* (RWN) **[4]**, two sub-miniature valves were manufactured **[5]**: the 1AD4/DF62 and the 5678/DF60, which were produced in volume in the US and Europe. They became the DF668 and DF669 in the GDR. They were always specified to be *similar*, not *identical* to their prototypes (**Figure 2**) – it is assumed that some manufacturing problems remained. The EKB manual requires that all valves be replaced after 300 hours, indicating a rather short lifetime!

Figure 2. RWN sub-miniature valves in the EKB/R5 and their prototypes.

VEB Werk für Bauelemente der Nachrichtentechnik (WBN) developed and made low-power PNP germanium alloy transistors (*e.g.* OC811/816) and a specialised semiconductor factory (HWF) was built in 1957 at a new location **[6]** for volume production (**Figure 3**). The transistors, perhaps this could be called a 2nd generation, worked up to 300 kHz, slightly less than, for example, an OC81 (*Philips/Valvo* 1957), but allowing their use well above audio frequencies.

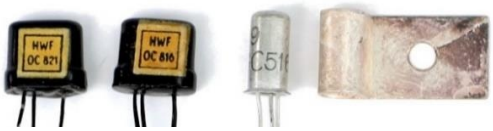

Figure 3. HWF transistors OC811/816 in the EKB/R5, GC516 replacement.

The engineers at Dabendorf decided to go for these new developments: use transistors wherever possible and sub-miniature valves for the remaining functions. Only one conventional miniature valve had to be used: for the mixer a DF97 was chosen, a pentode with g3 on a separate pin. The DF97 was designed in 1956 by *Philips/Valvo* as mixer and IF amplifier for AM/FM battery radios, outperforming the often used DK92 hexode, but needing a separate oscillator valve. It was also manufactured **[5]** by RWN.

The EKB thus presents itself as an interesting changeover project, making do with what was locally manufactured and, as a result, mixing three different technologies of active devices in a successful combination.

Passive components

Carbon film resistors were used in combination with tubular ceramic capacitors. The electrolytic units are, as far as the author can see, hermetically sealed as are some of the film capacitors. All appear to have been produced in the GDR which had a capable electronic industry at the time and, under the umbrella label RFT **[7]**, exported components to other (East) European countries and the USSR.

As far as can be determined, all coils, filters and transformers were produced in-house. The maintenance manual contains drawings with winding, laquering and testing details for each of these inductive components!

Electrical concept

As illustrated in the block diagram (**Figure 4**), the EKB is a superhet receiver using single conversion for A2 and A3 and double conversion for A1. It provides headphone output. A bandswitch selects one of 6 slightly overlapping segments to cover 1.45–22.5 MHz.

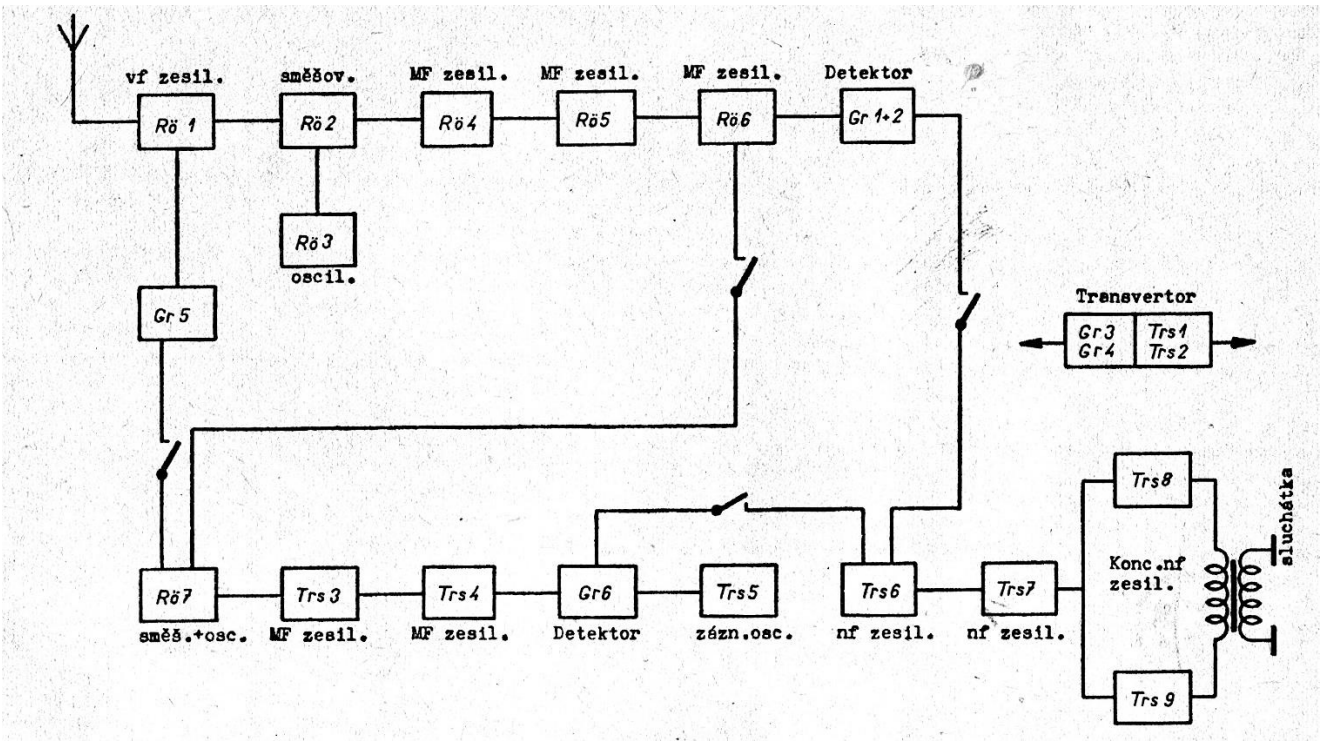

Figure 4. Block diagram of the EKB/R5 (from the Czech manual)

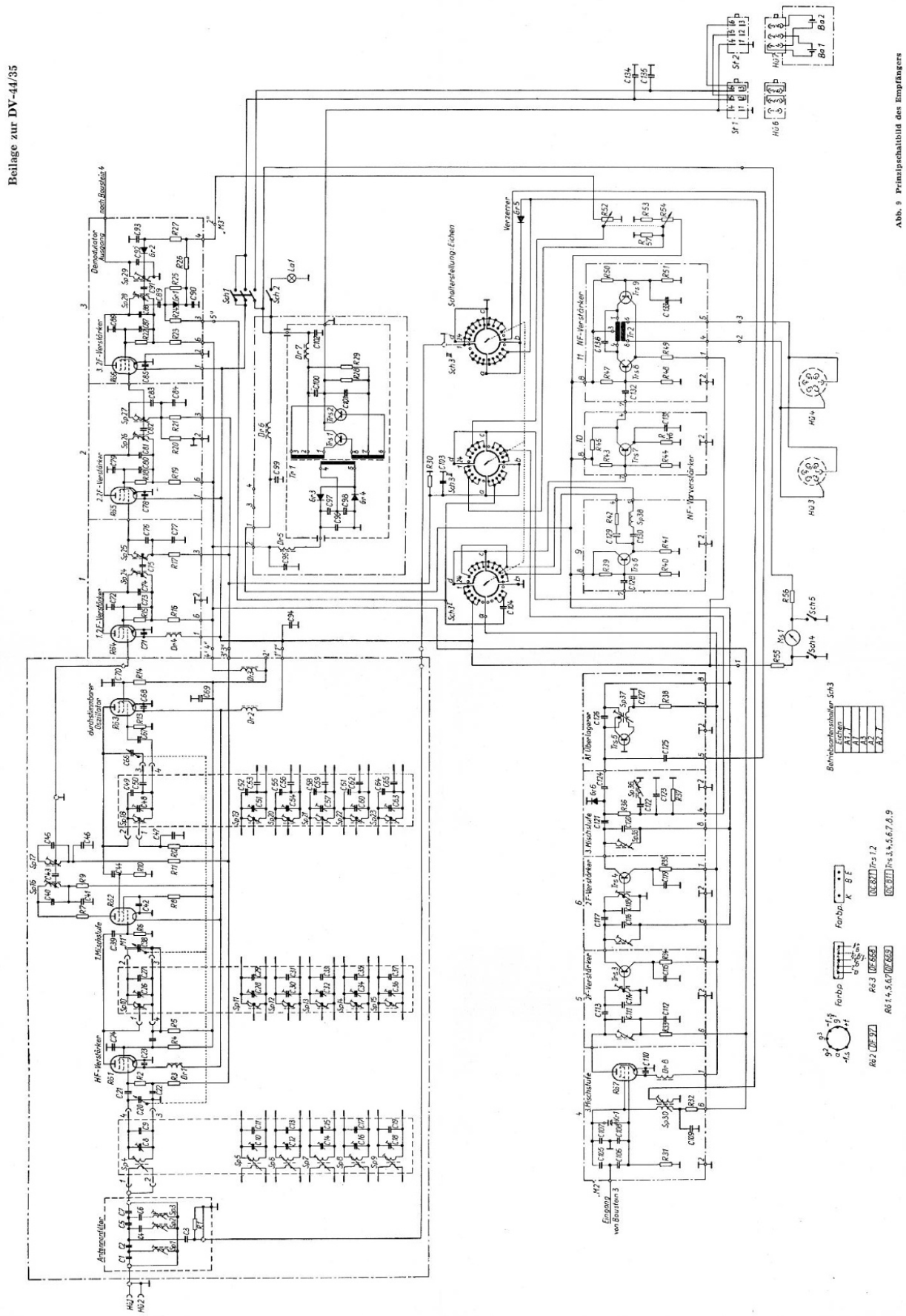

Figure 5. Circuit diagram of the EKB/R5 receiver

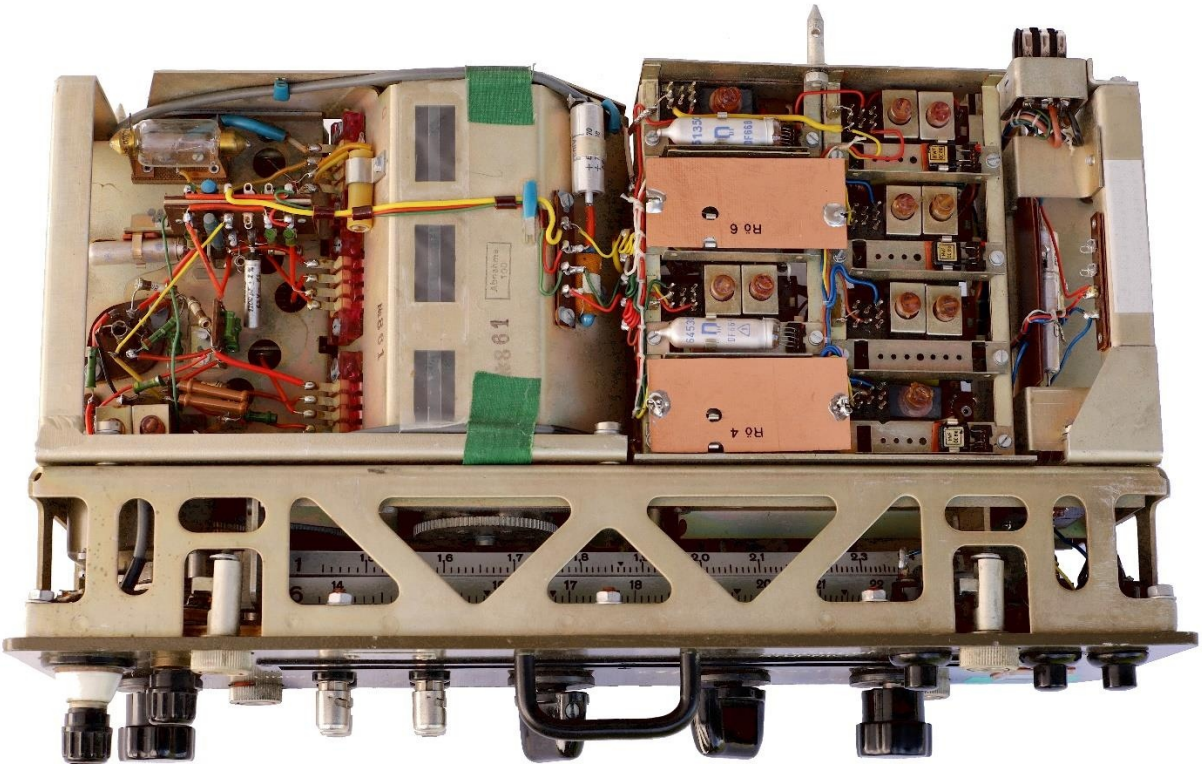

Figure 6. Chassis top view of the EKB/R5 receiver

With reference to **Figures 4 and 5**, the signal from the antenna passes protective circuits to a tuned RF amplifier (Rö 1, DF669) before entering the multiplicative mixer (Rö 2, DF97) through an intermediate tuned circuit. The heterodyne signal is generated by a separate oscillator valve (Rö 3, DF668) and fed to g3 of the mixer.

The first IF amplifier (900 kHz) has three stages (Rö 4–6, DF669) coupled by bandpass filters (b/w 4.5 kHz). For A2 and A3 the signal is demodulated by germanium diodes (Gr 1+2, OA645) to obtain AF and AGC signals.

For A1, the 900 kHz signal is fed to the self-excited, crystal-controlled (932 kHz) second mixer (Rö 7, DF669). The second IF amplifier (32 kHz) is also bandpass filter coupled (b/w 1 kHz) and has two transistor stages (Trs 3+4, OC811/816). The amplified signal is mixed with the BFO (Trs 5, OC811/816) in a diode (Gr 6, OA645) to produce a 1 kHz tone for the AF amplifier.

The AF amplifier has a preamplifier, a driver and a push-pull output stage (Trs 6–9, OC811/816) and provides ~2 V into 600 Ω. An integrated audio filter (1 kHz, b/w 200 Hz) may be activated.

The 932 kHz crystal oscillator Rö 7 also serves as a calibration source through Gr 5. The dials carry suitable marks (▼) and can be mechanically adjusted to match.

Two floating voltages, normally provided by rechargeable NiCd batteries, are required: 1.2 V for all valve heaters and 7.2 V for the transistors and the anode supply. This anode supply (60 V) is generated (**Figure 5**) by an internal push-pull inverter (Trs 1+2, OC821) and rectified by diodes (Gr 3+4, OY112). No high voltage anode battery is needed.

Mechanical concept

The outer case, the covers and the front panel are made from AlMg alloy. An internal wall separates the receiver plug-in space from the battery. The battery box is attached from the rear and the complete receiver inserted from the front. Rails on the bottom allow mounting the receiver to a pack frame or a vehicle mount. Rails on top hold an accessory bag; a bracket holds the antenna. On the right hand side there is a carrying handle (**Figure 1**).

The receiver unit that plugs into this case is built around a front panel with a rear cage bolted to it (**Figure 6**). Installed to the cage from the rear are the three modules of the receiver, the complete RF module being the largest. Interconnection is not through connectors but by tag strips located conveniently to wire modules to the next module or to the front panel. Module replacement is thus not possible without unsoldering wires but was part of the maintenance strategy.

The cage behind the panel itself contains the tuning drive gearbox and the entire linear dial mechanism (moving the pointer and turning the hexagonal drum with the dial scales). The smoothly-working gearbox provides reduction rates of 720:1 (fine) and, after pulling the knob, 11:1 (coarse). Mechanical linkages are provided to engage and turn the tuning capacitor and the band turret, both located in the RF module.

Mounted to the front panel (**Figure 1**) are only the connectors (antenna, ground, headphones), the push-buttons for the dial light and the voltage tests. The four knobs (tune, band, mode, volume) sit on shafts protruding directly from the individual modules.

The wiring of the unit and modules is point-to-point, assisted by wiring harnesses inside the modules. The valves and transistors are all socketed. Valves, transistors and larger capacitors are held in place by clips. The maintenance manual includes drawings, here for the 'nail-board' to make the harnesses!

The mechanical construction of the modules, coils, transformers and electrical wiring is solid and well done, a good example of fine workmanship.

Module descriptions

The **RF module** occupies the left half of the radio and is made from welded sheet metal providing the stability needed for portable operation (**Figure 6, top left**). The band turret (6 bands) with three segments and the triple tuning capacitor are completely shielded in a box. The wiper contacts form the only point of entry located above the chassis panel provided to install the active circuitry. On the upper part of this panel are the antenna protection circuits, the RF amplifier, a tag board and the wiring to the local oscillator and first mixer valves. These valves are oriented upside down (**Figure 7**). Also included in this module is the first 900 kHz bandpass filter (top right).

Figure 7. RF compartment, side view.

The **IF and AF module** is quite complex and occupies most of the right hand space. It consists of a main frame with a front panel. The multipole mode switch and the volume control with battery switch are installed on the panel. The various active circuit stages are on individual submodules bolted to the frame.

On top of the frame (**Figure 8**) are the two IF amplifiers: three 900 kHz stages and second mixer using valves (signal flow left to right), 2x 32kHz amplifiers and BFO with transistors (signal flow right to left). The two shields on the first and third valve stages are not original (see later).

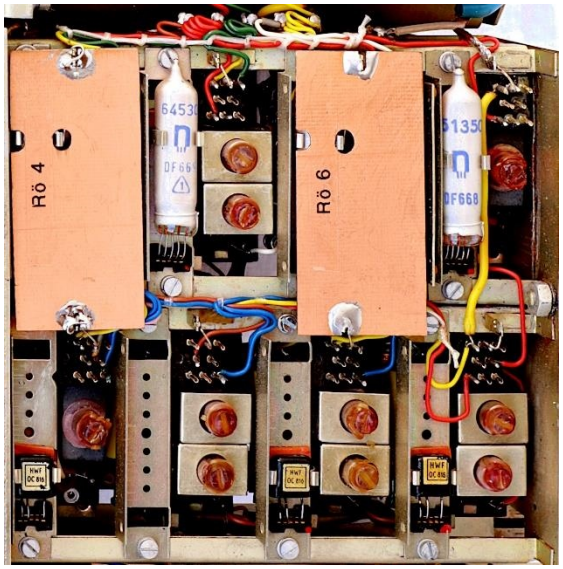

Figure 8. Dual IF amplifier, upper unit: 900 kHz, lower unit: 32 kHz.

The **AF amplifier and tone filter** with their miniature transformers is built from four submodules attached to the rear of the frame (**Figure 9**).

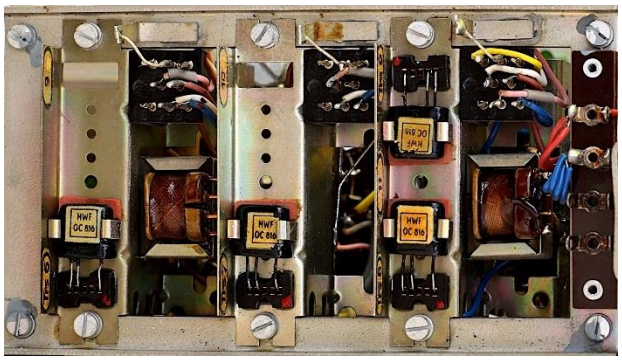

Figure 9 The AF amplifier.

The **DC/DC inverter module** (**Figure 10**) is installed on the right hand side of the radio. The switching circuitry is in a shielded box for obvious reasons. This module also carries the two connectors to the battery pack (not shown).

Figure 10. DC/DC inverter, cover removed.

The original battery box contained 18 NiCd accumulators providing 1.2V @ 12 Ah and 7.2V @ 4A h in series/parallel configurations intended to provide 24 hours of operation. The set is turned on by pulling the volume control knob outwards. When the protective front cover is put on the set, the knob is pushed down and automatically turns off battery power.

R5 s/n #744, phase 1

Some 20 years ago, the author came across what (with hindsight) must have been the units of two RM31-M-a stations **[2]**. They were in excellent condition and likely had not seen much use. Most of the material went to a museum, but two R5 receivers could be obtained. Some accessories were missing on one unit, but it was a good find. The receivers were very nice and clean on the inside and an early functional test was encouraging.

The R5P or A is a true EKB, albeit with a olive-green front panel inscribed in Czech and different headphone connectors. In addition, the cover does not contain a whip antenna nor a screwdriver, instead a small tool is supplied to remove the battery or adjust the dial. One whip only is supplied and it is a construction made from bundled steel wires, not a band antenna. The internal labels, however, such as “Rö” for valve, remained and even the instruction manual in Czech had been printed in the GDR. S/n #744 was built sometime in1962 as a R5P.

The attached power supply was designed and made in CZ (*Tesla* **[8]**), judging from the documents in 1967. It uses *Tesla* germanium transistors (OC27, OC30, OC75) and provides the two stabilized voltages for the R5. This Czech power supply ZS-R5 **(Figures 11 and 12)** was not as nicely built as the EKB and it was found that important restoration work was needed first. The electrolytic capacitors were visibly leaking and had to be removed. Resistors and transistors were checked with no problems. After replacing all capacitors and some rectifier diodes, the power supply was tested and worked as required; nice old germanium transistor technology.

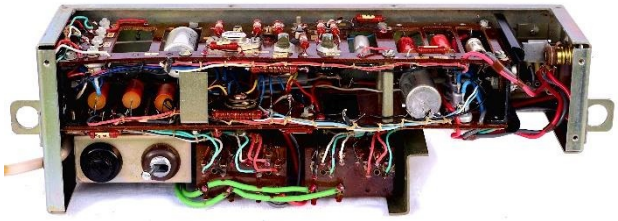

Figure 11. ZS-R5, dual mains power supply, plastic cover removed.

The camo accessory bag that can be fixed to the R5P receiver (**Figure 13**) contains the whip (1.5 m), a wire antenna reel (L-antenna 9.5 m/1 m), an antenna mount, two headphones, a cable for external batteries (2 m), a charging cable (0.2 m), an instruction booklet and a set of spare parts (valves, transistors, lamps, knobs). No counterpoise or grounding kit is supplied. Some of the spare transistors were GC516 (corrected in the R5 manual, including an official stamp), a replacement with a different case plus a clip (**Figure 3**). The author's bag contains all parts listed in the Czech R5 manual.

Part of the complete R5P receiving system were also two NiCd battery packs and a pack frame.

Figure 13 Accessory bag (spares & booklet not shown).

The R5A is equipped with a vehicle mount on rubber shock absorbers. It has no battery pack; only the battery and charging cables plus the spares set are listed as supplied.

What the author found, and both receivers were in exactly this mixed configuration, is a R5P, with bag and all accessories plus an attached vehicle mount R5a-2 and mains supply ZS-R5, but no battery packs nor a pack frame. Where and how these radios were used remains uncertain, in **[2]**?

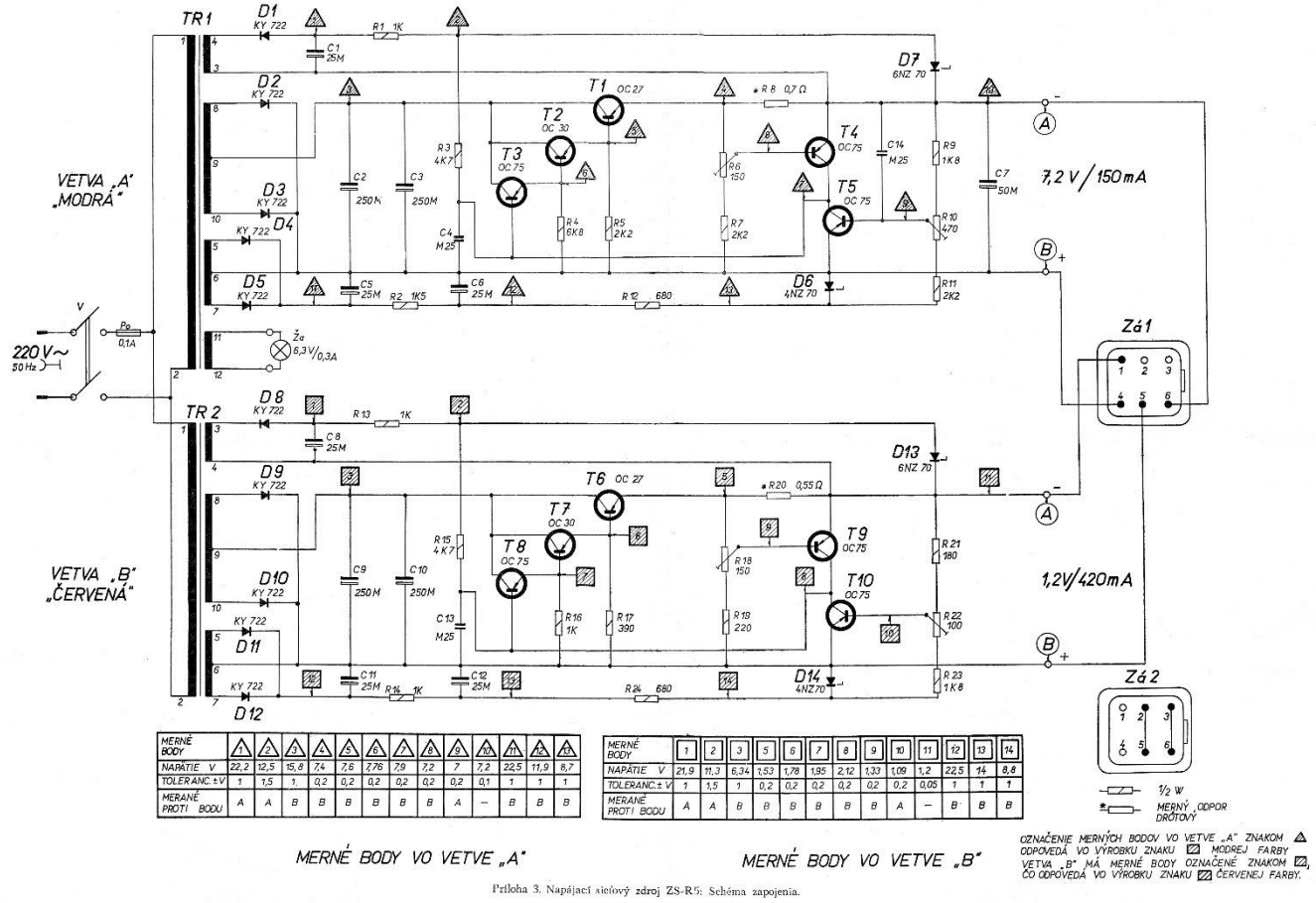

Figure 12. Circuit diagram of the ZS-R5, dual mains power supply

R5 s/n #744, phase 2

The ZS-R5 operational, the receiver could be powered up and it worked right away, despite the fact that, in 2006, it was over 40 years old. Further tests and operation showed no problems and the receiver was reinserted into the case.

Unfortunately, at this stage, a disturbing heterodyne tone appeared. Analysing the effect, it was found that this was caused by instability in the three-stage 900 kHz IF amplifier. The interstage coupling appeared to increase when the radio was placed inside the box. It was also found that, in the third stage, a higher gm DF668 had been inserted. This was changed to the DF669 EKB configuration, but did not eliminate the problem. As shown in **Figure 8**, two screens made from thin single-sided PCB material were installed atop the first and third IF stages – success.

The receivers also had a DF668 in the second mixer/crystal oscillator, but this was left as is. The changes to DF668 do not appear to be official modifications reflected in the documents, but were implemented in both R5 receivers – a field change for an undiscovered good reason?

Operational notes

The EKB/R5 is mainly an A1/CW receiver as additional circuits were included for this mode to improve performance (second IF, tone filter). However, the BFO cannot be tuned, it is always intended to produce 1 kHz LSB. The A3 mode allows fine quality reception of broadcast AM signals. SSB cannot be received well; A3 has no BFO and A1 is too narrow.

The receiver is designed to work from short aerials; an attenuator is recommended when using, for example, an 80-metre dipole to avoid overloading the DF97 mixer. Stability is fine (not measured) and the dial, after calibration, is quite accurate. Tuning operation is very smooth and fine enough for the A1/CW mode with a 200 Hz tone filter.

The EKB/R5 is certainly a nice receiver, especially when it is almost new like the authors unit. S/n #744 is now part of a small 'museum' of commercial receivers here and it still works.

References

1. *VEB Funkwerk Dabendorf* was, up to 1945, a branch of *C. Lorenz AG* for professional telecommunication equipment. It continued this specialized work after 1946. 1965 it was integrated into *VEB Funkwerk Köpenick* but continued its work.
2. See «http://www.csla.cz/vyzbroj/spojovaciprostredky/rm31_1.htm». Scroll down about two-thirds of the page to see the picture of the RM31-M-a station, R5 shown top right. The main receiver is a R4, the transmitter a RM41-1, both designed and made in CZ.
3. *Zenith* made use of the new diffused alloy transistors made by *Philips* group (e.g. OC170). Comparable types (e.g. OC882, 1962) produced in the GDR followed too late for the EKB design. For further *Royal 1000* details see, for example, «https://www.radio-antiks.com/IndexRadio-Antiks_Zenith_R-1000.htm».
4. RWN was, up to 1945, the *Röhrenwerk Neuhaus a.R.* of the *Telefunken-Gesellschaft*. After nationalization and several name changes it was *VEB Röhrenwerk Neuhaus a.R.,* at the time of interest here.
5. The author does not know whether a licence, *e.g.* from Western Germany, was obtained or the valves were reengineered by RWN.
6. WBN was up to 1945 the DRALOWID factory in Teltow. Starting nationalized as *VEB Dralowid-Werk* it was renamed in 1953 to reflect the much wider range of products. A new semiconductor factory was opened in 1958 (Frankfurt/Oder) but split off in 1959 as *VEB Halbleiterwerk Frankurt/Oder* (HWF).
7. *Vereinigung volkseigener Betriebe RFT - Radio- und Fernmeldetechnik* (VVB RFT), Leipzig, was formed in 1948 as an umbrella organization and registered trade mark RFT for the marketing of all electronic/telecom GDR products. In 1958, it was split into three units, of interest in our context is *VVB RFT Bauelemente und Vakuumtechnik* (components and vacuum technology).
8. *Tesla* was formed in 1946 as a Czech state enterprise nationalizing and combining all 16 existing electronics/radio companies in the country. It is still in business: «https://www.tesla.cz/en/».

Documents:

9. DV-44/35 *Vorschrift zum Empfänger EKB*, Ministerium für Nationale Verteidigung, 1962. This is the GDR operator's manual, in German. The author has an original soft-cover printed booklet. The circuit diagram was scanned from a fold-out sheet from this document.
10. DV-44/43 *Instandsetzungsvorschrift zum Empfänger EKB* (maintenance instructions for the receiver EKB, in German), Ministerium für Nationale Verteidigung, 1963. The author has an nice original hard-cover printed issue with all the 10 attachment sheets in a pouch inside the rear cover.
11. *Návod k obsluze krátkovlnného přijimače R5A – R5P* (shortwave receiver operating instructions R5A-R5P, in Czech), 1962 (printed in GDR). The author has the original soft cover manual; the block diagram has been scanned from this document.
12. *Napájací Sieťovŷ Zdroj typ ZS-R5* (mains power supply source typ. ZS-R5), 1968. Includes as *Príloha 3* (attachment) an A3 sized circuit diagram. The diagram scan was made from this sheet (original printed brochure).
13. *Popis a Návod na Obsluhu pre Napájací Sieťovŷ Zdroj typ ZS-R5* (description and operating instructions for power supply source type ZS-R5), 1967. A short form (4 pages) brochure that comes with the unit and is marked with the s/n (original printed brochure).

Additional notes:

The Czech documents have been 'read' using https://translate.google.com and then suitably interpreted.

All photos and scans by the author.

~ ~ ~